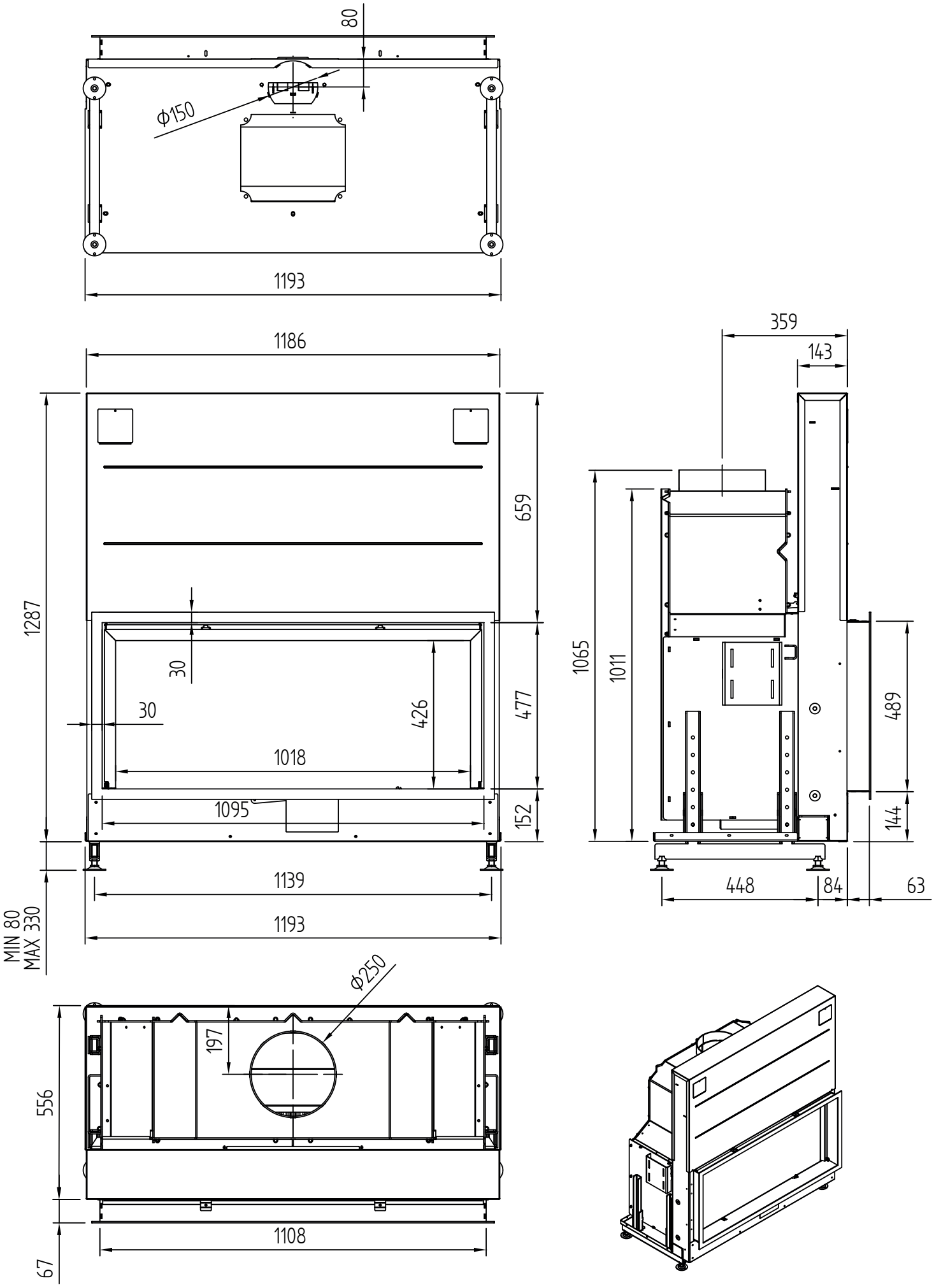

ARGENTO 1200 H BASIC 290KG