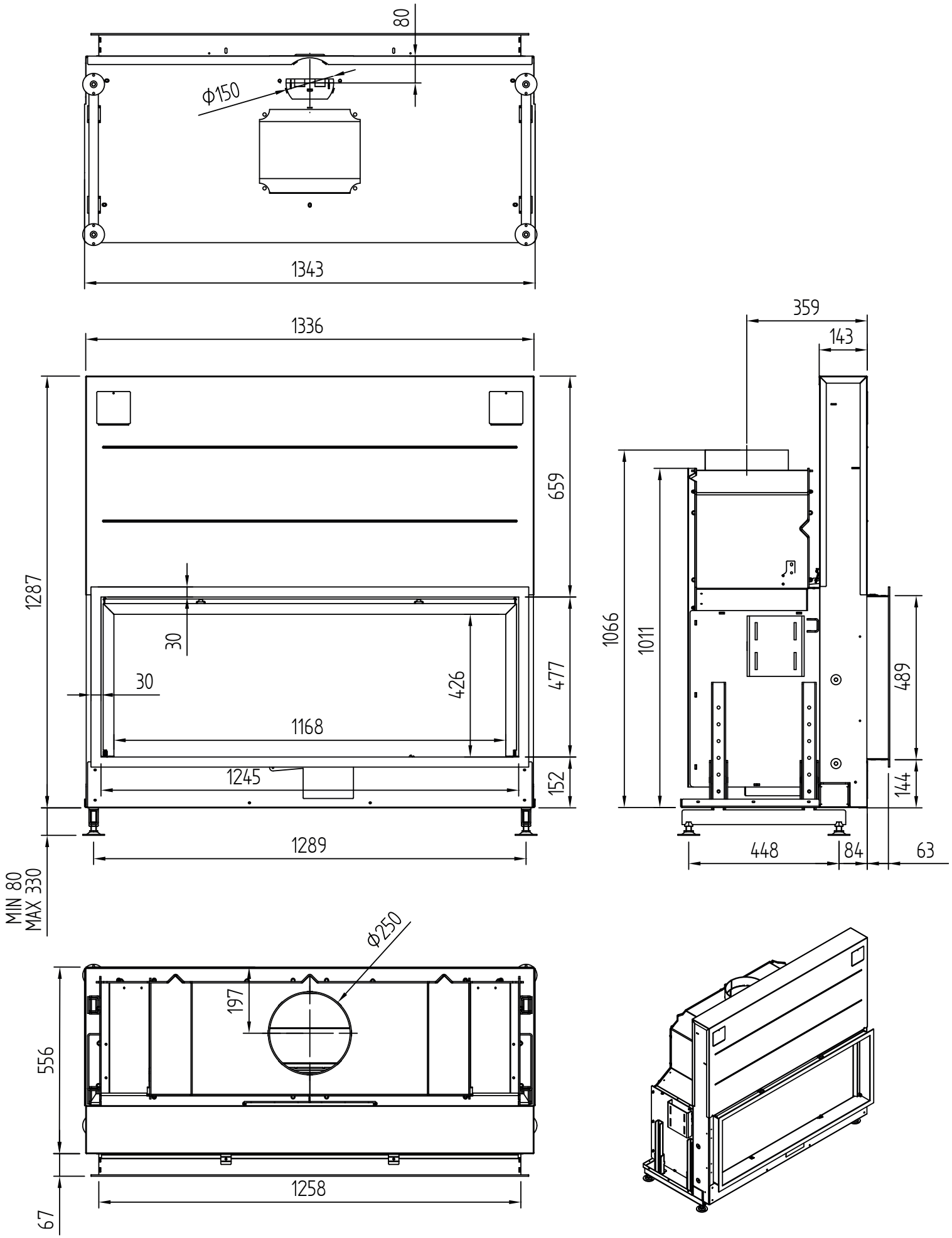

ARGENTO 1350 H BASIC 325KG