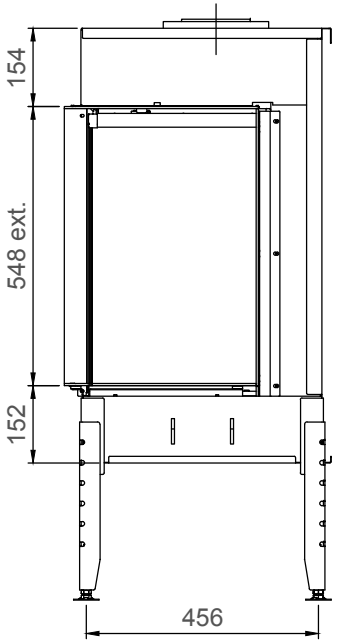

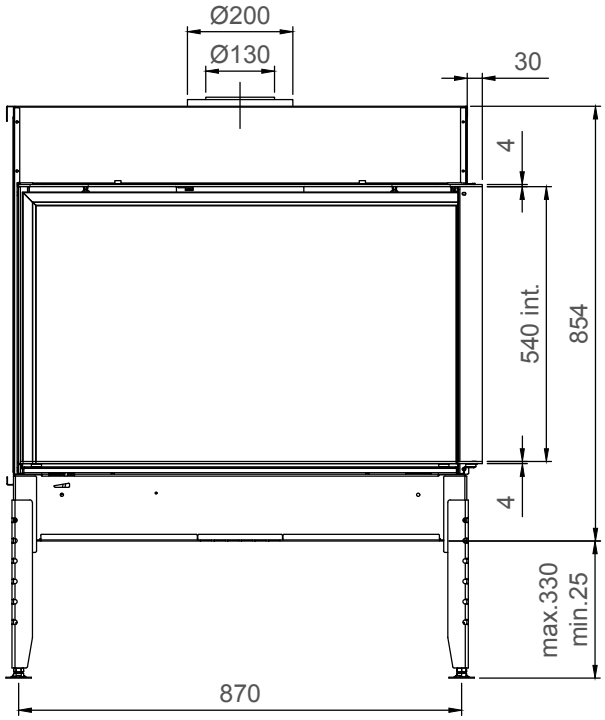

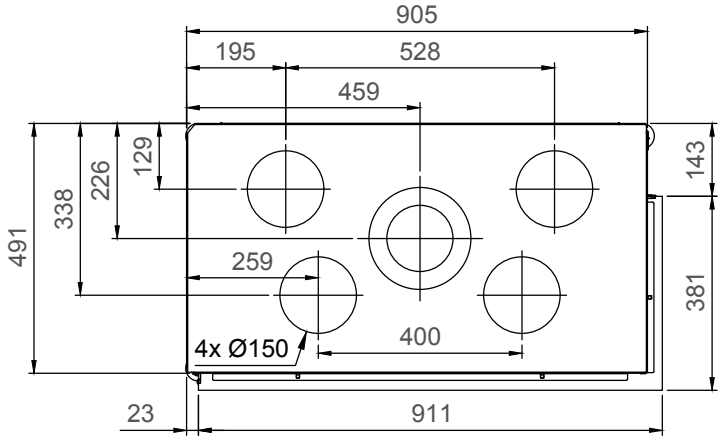

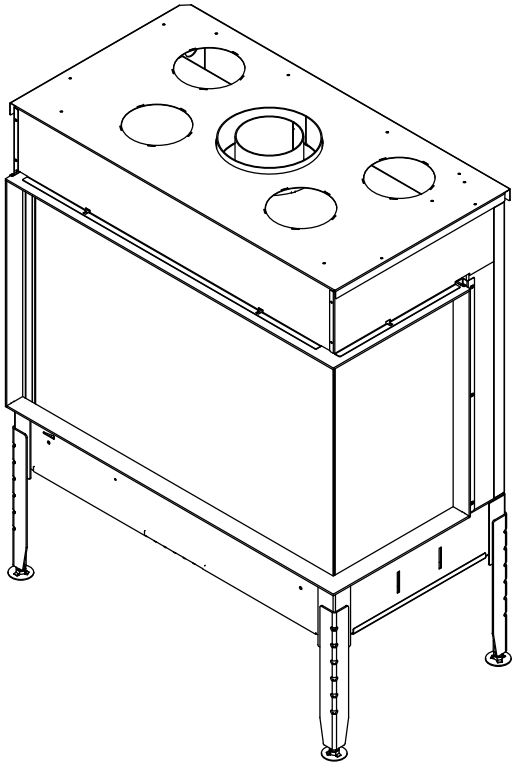

True Vision 850CL/CR - (Type 4 - 30mm)

ver. 20.7.2018